Revised 10-1-2005

MKL 4.0/40-W

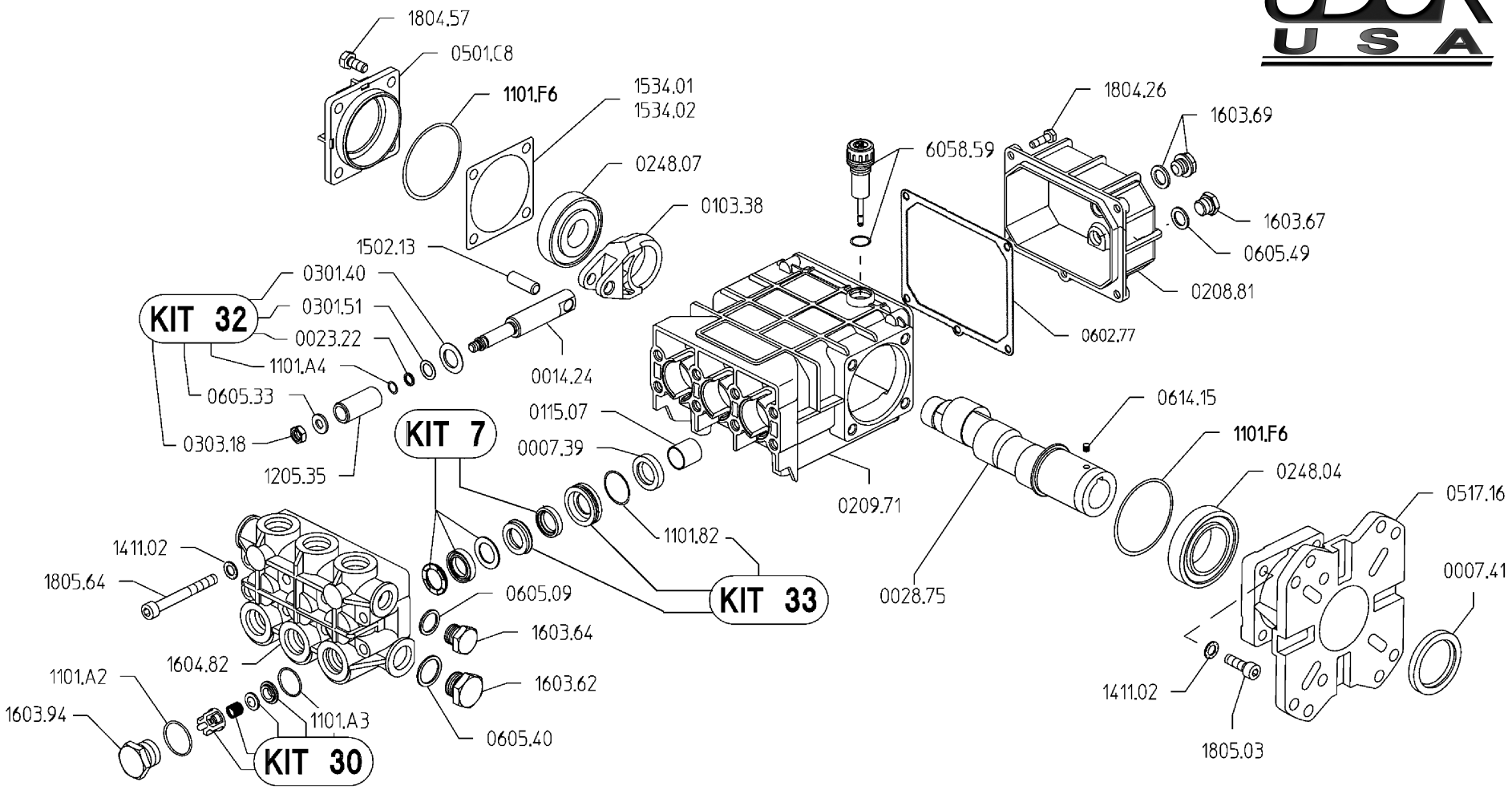

MKL 4.0/40-W Quick Reference

Maximum Flow .....4.0 GPM	Valve Kit 04-KIT UD-30
Maximum Pressure .....4000 PSI	Seal Kit.....04-KIT UD-7
Rated Pump Speed .....3400 RPM	Brass Kit 04-KIT UD-33
Oil Capacity.....28 oz. UDOR LUBE or SAE 30W Non-Detergent Oil	Plunger Bolt Kit 04-KIT UD-5
	Plunger Part # 04-1205.35
	Plunger Diameter.....15 MM